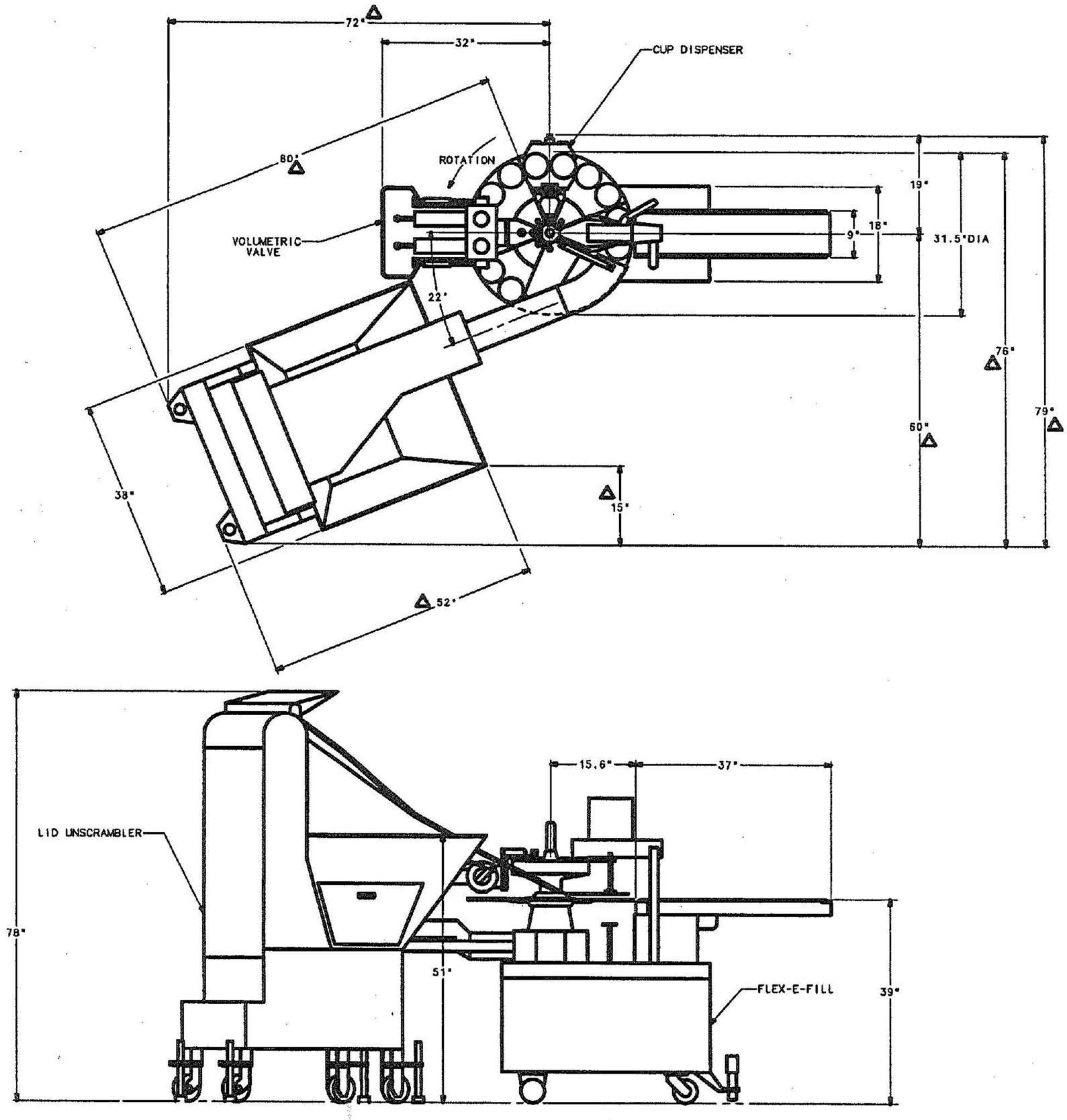

PROPRIETARY AND CONFIDENTIAL The information contained in this drawing is the sole property of Stanpac Inc. Any reproduction in part or as a whole without the express written consent of Stanpac Inc is strictly prohibited.	**UNLESS OTHERWISE SPECIFIED:** All Dimensions in Inches Tolerances as follows: Fractional ±1/16" Decimal X.X" ±0.02" X.XX" ±0.01" X.XXX" ±0.005" Angular Dimensions ± 0.5°	DATE: 04/04/02	DWG #: 3893393	STANPAC www.stanpacnet.com	SIZE E / REV *
USED ON: ----------		DRAWN BY: W.J. Searle	MATERIAL: ----------		
		SCALE: N/A	TITLE: Flex E Fill with Unscrambler Lidder		SHEET 1 of 1